GTD

GTD-F4019 II PIXIE

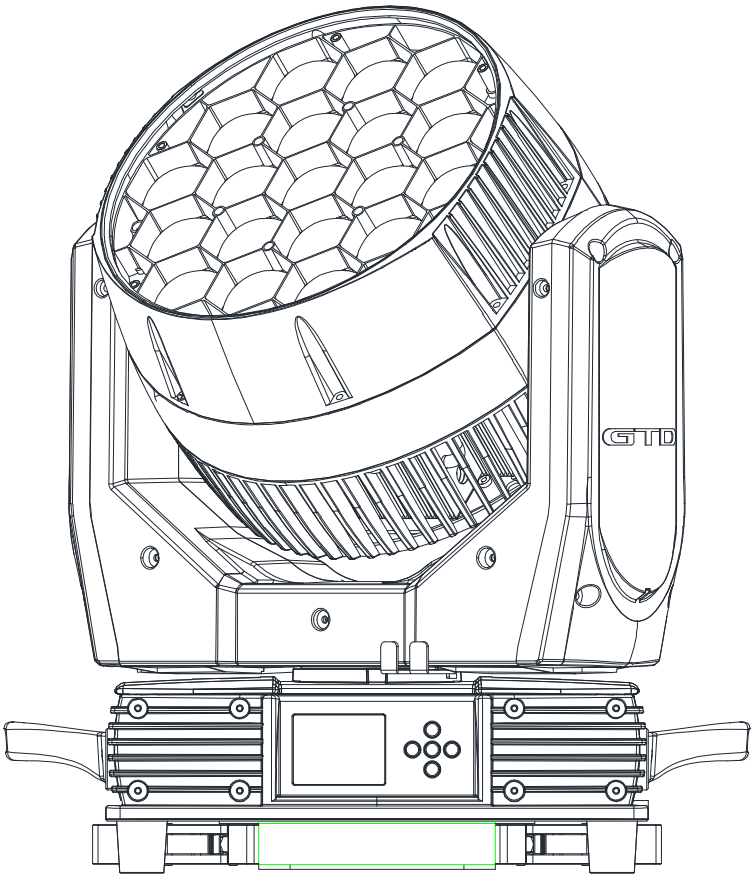

User Manual

GTD all rights reserved. Information, specifications, diagrams, images, and instructions herein are subject to change without notice. GTD logo and identifying product names and numbers herein are trademarks of GTD. Copyright protection claimed includes all forms and matters of copyrightable materials and information now allowed by statutory or judicial law or hereinafter granted. Product names used in this document may be trademarks or registered trademarks of their respective companies and are hereby acknowledged. All non-GTD brands and product names are trademarks or registered trademarks of their respective companies.

GTD and all affiliated companies hereby disclaim any and all liabilities for property, equipment, building, and electrical damages, injuries to any persons, and direct or indirect economic loss associated with the use or reliance of any information contained within this document, and/or as a result of the improper, unsafe, insufficient and negligent assembly, installation, rigging, and operation of this product.

P/N：1502010393A

Contents

1. Safety instructions **3**
2. Product introductions. **5**
2.1 Dimensions 5
2.2 Fixture overview 6
2.3 Accessories 6
3. Packing and shipping **7**
3.1 Protection lock 7
3.2 Unpacking 7
3.3 Packing after use 7
4. Installation **8**
4.1 Clamps installation 8
4.2 Device installation 8
5. Power / Control connection **9**
5.1 Power connection 9
5.2 Control connection 9
5.3 Testing 9
6. Control panel **10**
6.1 Panel instruction 10
7. Technical specification **11**
8. Menu structure **13**
9. DMX protocol **15**
10. System wiring diagram **24**
11. Maintenance and Troubleshooting **25**
11.1 Cleaning and maintenance 25
11.2 Troubleshooting 25

1. Safety instructions

Before using the fixture, read the latest version of the product user manual, paying particular attention to the safety instructions. Please check www.gtd-lighting.com for the latest revision/update of the user manual.



The manufacture of this fixture, are not responsible for damages, resulting from misuse of this fixture, due to the disregard of the information printed in this user manual.



DANGER!

Hazardous voltage. Risk of lethal or severe electric shock



WARNING!

Wear protective eyewear. Never look directly into the light source.



WARNING!

Burn hazard. Hot surface. Do not touch.



Only to direct mounting on non-combustible surfaces.



Replace all cracked glass shields.

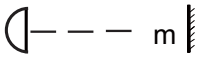

Minimum distance to lighted objects.

ta. . . °C Maximum ambient temperature.

tc. . . °C Maximum temp of the external surface.

⚠ General guidelines

- The protection rating of this product IP66.
- Never open this fixture while it is in use.
- The fixture should be kept clean. DO NOT operate the fixture in extreme heat or dusty environments. Avoid contact with chemical liquid.
- Minimum distance to lighted objects must 3.28 feet (1m).
- Maximum temp of the external surface 158 ˚F (70˚C).
- Maximum ambient temperature 113˚F (45˚C).
- Minimum distance of inflammable materials from the surface 1.64 feet (0.5m).
- Lamp should be replaced if damaged or distorted in shape due to extreme heat.
- Cover, prism or LCD Menu Function Display with visible damages such as cracks or scratches must be replaced to ensure performance of the fixture.
- Disconnect the fixture from power before changing any parts or accessories.
- Basic insulation should be maintained between the controllable device and the product power supply.
- Make sure that the installation area can hold a minimum point load of 10 times the weight of all installed fixtures, clamps, cables, auxiliary equipment, etc. Make sure that the cover, clamps and locks are undamaged. Certified safety cables must always be used when installing the fixture.
- The fixture is only intended for installation, operation and maintenance by qualified professional. Instructions stated in the manual must be complied.
- The fixture must be kept in a well-ventilated place at least 50 cm away from any wall surface. Check if the fans or ventilation openings are unblocked.
- To ensure operational safety, broken or damaged cables and light source can only be fixed or replaced by certified technicians, certified local distributors or the manufacturer.
- Do not stick filters or other materials onto the lens. Do not modify the fixture or install other than GTD manufactured parts.
- For questions regarding safety operation, please contact our technical personnel or call the service hotline 020-82898663.

2. Production instructions

2.1 Dimensions

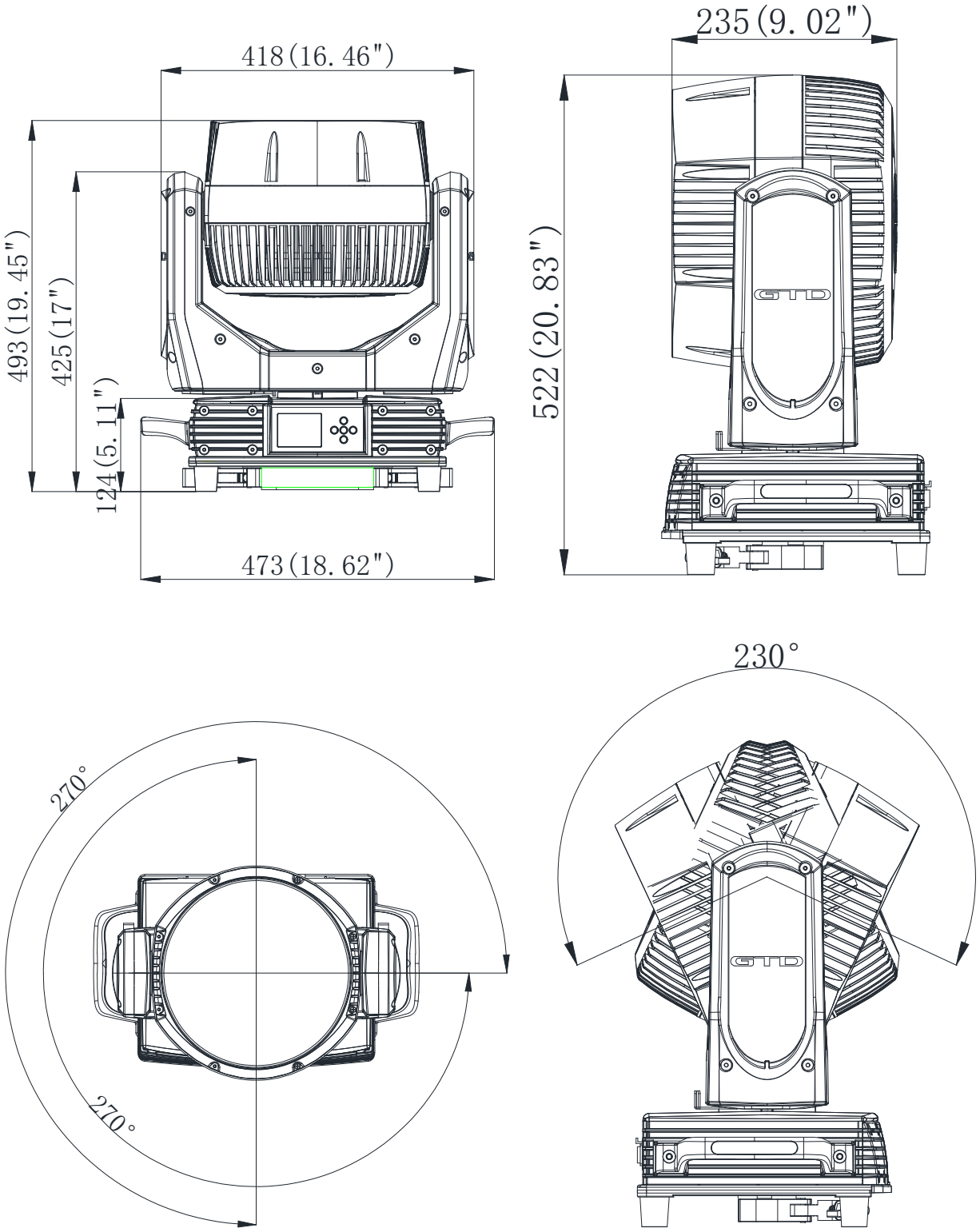

2.2 Fixture overview

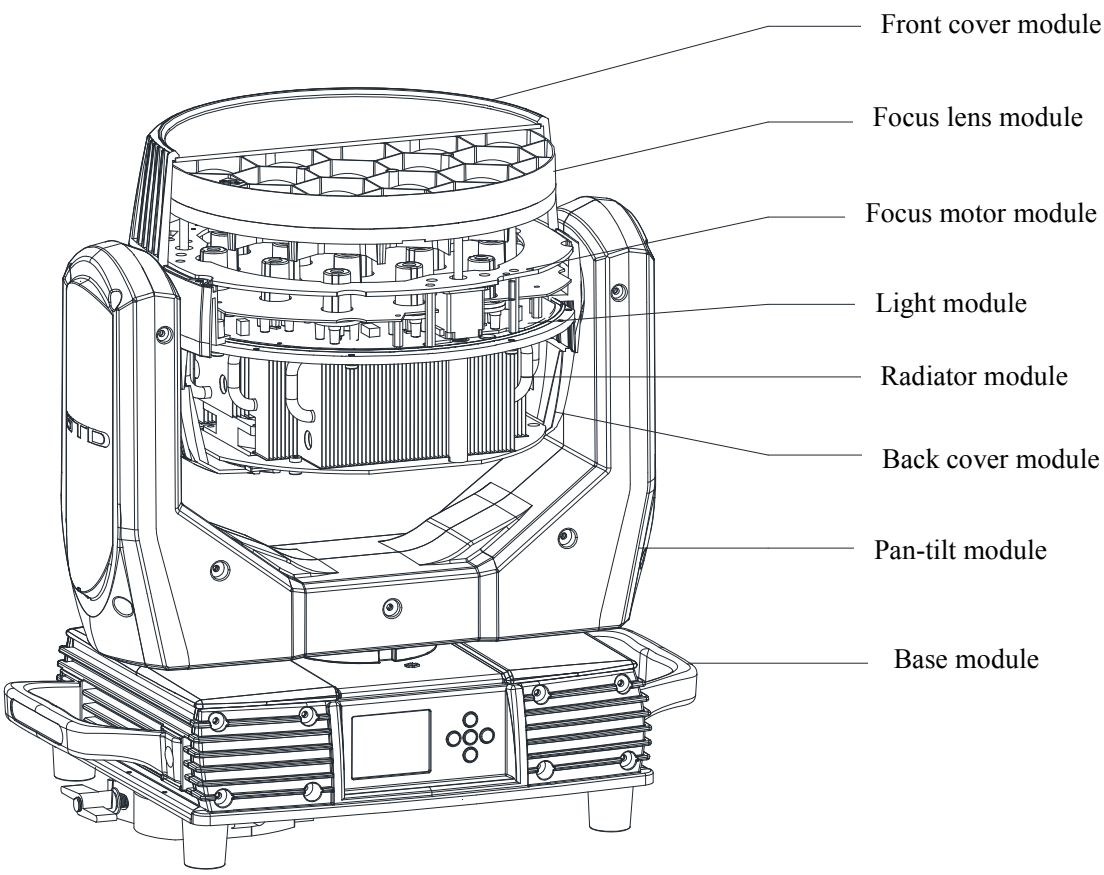

2.3 Accessories

Item	Qty	Unit	Remark
User Manual	1	Pc	--
Safety cable	1	Pc	Φ4*60cm 7*19 pc with hook　Material：Steel
Power line	1	Set	1.5m*2.5mm²
3-pin signal line	1	Set	5m

3. Packing and shipping

3.1 Protection lock

Pan locks are equipped to ensure safe transportation.

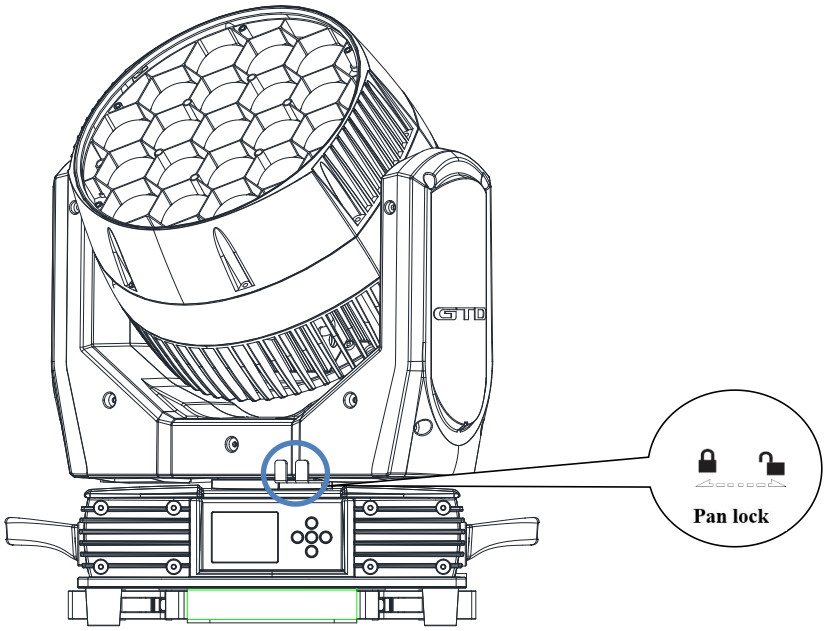

3.2 Unpacking

⚠ Notes

All products are quality controlled before they dispatched to customers. If the fixture is damaged during delivery, the customer must notify the shipper and manufacturer to file a damage insurance claim. Photographic evidence of the damage must be provided.

Flight-Case(specification: 1210*590*580mm)：Two sets in a box. Uncover the flight-case and remove the plastic packing bags. Hold the handles of the fixture firmly and take it out carefully.

Cardboard box(specification：555*530*375 mm): One sets in a box. Open the box and take out the whole set of packaging foam which are contained both the fixture and its accessories. Remove the foam from the top, put away the accessories, and then take out the fixture wrapped in the plastic bag.

⚠ Notes

Check if the pan is locked before connecting the fixture to power.

3.3 Packing after use

1. Switch off the fixture and wait for at least 5 minutes before disconnecting it from AC power. Cool down the fixture for at least 15 minutes before packing.
2. Lock pan.
3. Flight case: Wrap the fixture in plastic bags. Gripping the handle and then place it in the flight case along with all the accessories carefully. Close the cover lid. The wrap page are not allowed over 3 layers. Do not upside down.
4. Cardboard box: Wrap the fixture in plastic bags. Put it in the packaging foam along with all the accessories. Place the other set of packaging foam on top then put it carefully in the cardboard box.

4. Installation

4.1 Clamps installation

1.When the fixture lay on the stage, use the clamp of ground lock-style.

2.When the fixture be placed on the stage or mounted on the truss which faces any direction, hold up the clamp.

Warning：Make sure there is no damage on the clamps or safety cables before installation.

4.2 Device installation

1. Installed on the truss: (1) open the clamp, buckle it to the truss, and lock the nut clockwise; (2) Fasten the safety line, as shown in the picture below; (3) Open the horizontal lock.

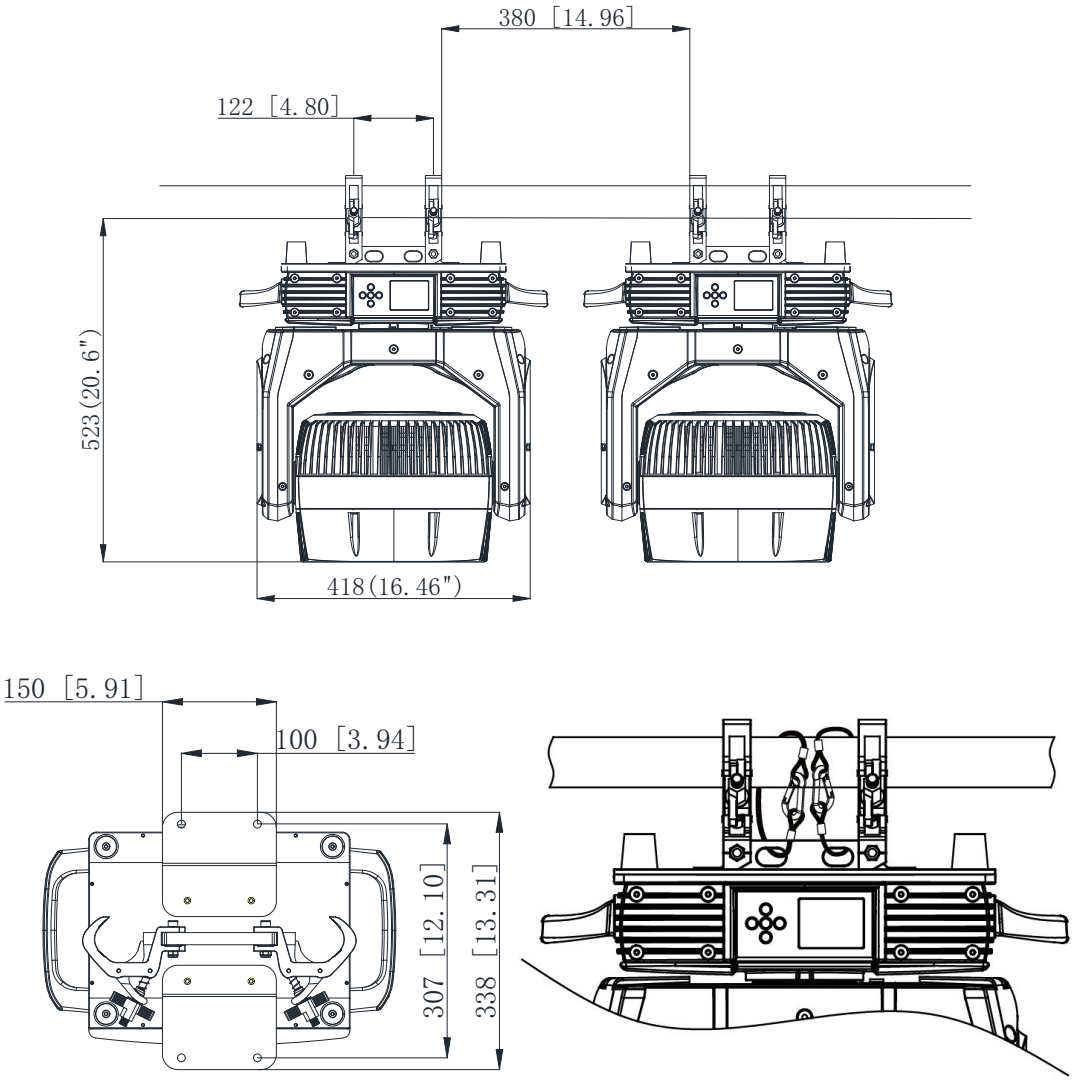

Sketch Map

5. Power/ Control connection

5.1 Power connection

Connection method:

- L (Live) Brown wire
- E (Earth) Yellow / Green bi-color wire
- N (Neutral) Blue wire
- The voltage and frequency of the power source must be in compliance with the ones marked on the fixture. It is strongly recommended that each fixture are to be connected to the power source separately so that they can be switched on / off individually.

5.2 Control connection

The fixture has 3-pin XLR connectors for DMX data input and output as shown below. Connection between the console and fixture, and between fixtures must be made with 2 core screened DMX signal cable. Maximum connecting distance of signal cable is 150 meters. Additional DMX512 signal-amplifier is recommended for longer distance.

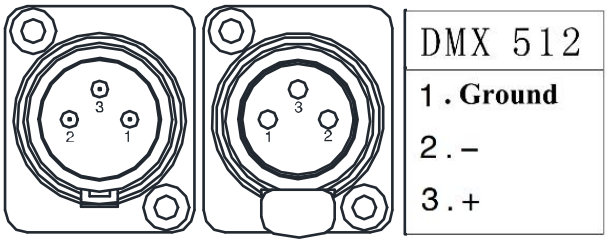

Connect the Console's DMX OUTPUT to the first fixture's DMX INPUT, then the first fixture's DMX OUTPUT to the second fixture's DMX INPUT and so on. It is recommended not to connect more than 32 units on a single DMX universe. On the last fixture's output connect a DMX terminator. (The terminator is a 3-pin XLR connector with a 1/2W and 120Ω resistor between the pin 2 and pin 3) as shown below:

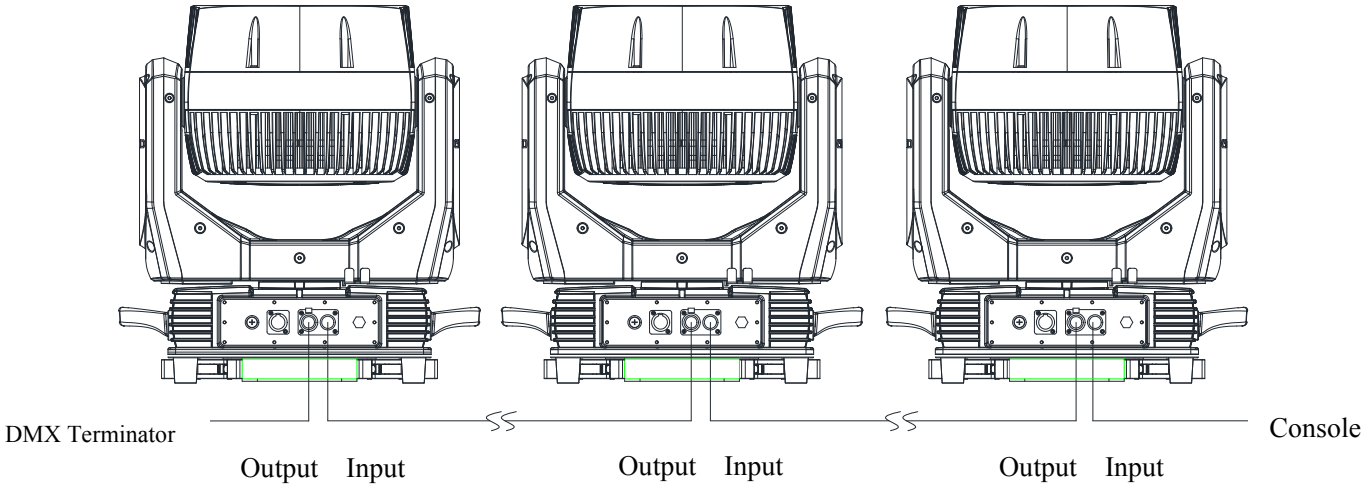

5.3 Testing

Connect the fixture to AC power. Check if the light source is on and the fixture is independently controllable before putting into operation.

6. Control panel

6.1 Panel instruction



- Press Left-click to select the function menu, press it again exit.
- Press Up or Down to change the value of the selected function (increase or decrease).
- Press Up/Down- click selected menu function, and then confirm with right click.
- Press the Left-click to exit menu when you finish setting up.
- Middle-click :reserved

7. Technical specification

- **Optical**

  Light source: LED 40W RGBW 19pcs

  Expected average lifetime: 20000 h

  Color temperature correction: 3200K~7200K

  Zoom range：9°-55°(10%)/6°-33°（50%）Linear high speed zoom

  Color: R/G/B/W, color conversion and perfect mix-color effect

  Ra≥70

- **Electrical**

  Power input, nominal: 100-240V~ 50/60Hz

  Max. Power consumption: 960W

  Max current: 10A PF: ≧0.96

  Power supply unit: wide range electronic SMPS

  Main fuse: 250V / 15A

  Power input: power plug

  DMX data input/output: Chassis 3-pin

- **Control and programming**

  Control channels (DMX): 95/20/172

  Protocol: DMX-512 RDM

  Display: LCD

- **Physical / Installation**

  Weight: 50.70 lbs (23kg)

  IP rating: IP66

  Material: Aluminum, copper, steel, plastic, iron

- **Dynamic effects**

  Pan/Tilt movement: 540˚/230°，adopting a function which resets 16bit accurately and automatically

  Strobe: 1-25Hz, strobe randomly, pulse randomly, strobe synchronously and asynchronously

  Dimmer: 0-100%, electronic linear dimming

- **Thermal**

  - Operating range: 5˚F to 113˚F (-15˚C to 45˚C)
  - Storage range: -40˚F to 140˚F (-40˚C to 60˚C)
  - Cooling: Active fan
  - Humidity: ≤75%

- **Certification and Safety**

  EMC: EN 55103-1:2009, EN 55103-2:2009, EN 61000-3-2:2006+A2:2009, EN 61000-3-3:2013,

GB/T 17743-2007, GB 17625.1-2012

Safety: EN 60598-2-17:1989/A2:1991, GB/T 7000.1-2023, GB/T 7000.217-2023

- **Photometric**

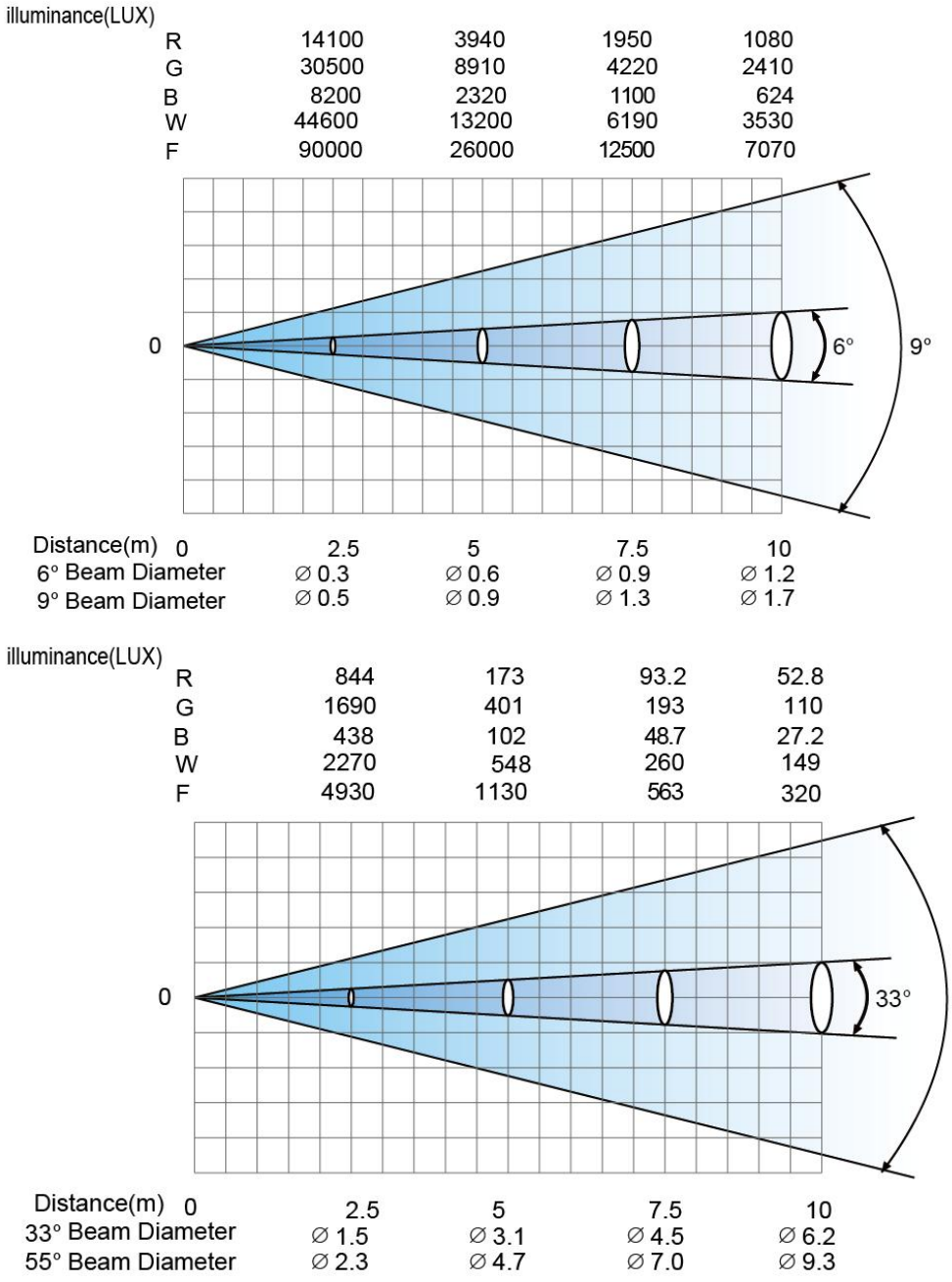

- **Other features**

- Sleep mode: uses the most advanced technology to activate sleep mode remotely. When the fixture is disconnected from signal, the sleep mode is enabled automatically to make it more stable and safer. Sleep time can be customized.
- Communications Design ： DMX wired/wireless transmission, bidirectional-control technology, upgrade the software quickly and conveniently by using DMX cable.
- Thermal design: The wind drainage and intelligent temperature monitoring technology can monitor lighting’s state: on /off. It can adjust the thermal design by the position’s temperature of lighting so that the temperature can be controlled.

8. Menu structure

Level 1	Level 2	Level 3	Level 4	Info
Run setting	Address Setting Value Display Auto-Program	Address: 001~ XXX Pan ……，All，Off Master /Slave		Setting the DMX address Display the channel value Run auto program in master or slave
Device Info	Time Info	This Time Total Time Last Run Hours Lamp Hours Lamp Off Time Timer Password Clear Last Run L-Timer Password Clear Lamp Time	XXXXXX Hour XXXXXX Hour XXXXXX Hour XXXXXX Hour XXXXXX Minute Password: XXX(XX) Yes/No Password: XXX(XXX) Yes/No	Since power on time Product total run time Last product run time Lamp on time Lamp close time Clear last time password Clear last time Clear lamp time password Clear lamp time
	Temperature	Temperature1/2/3	XXX ’C/’F	Body temperature
	Fan1.Fans Info.	Ok/Err/No		Show fans’ status
	Err Info.	No/...		Show this device’s status
	Software Version	X.X		The software version
System Setting	Status Setting	Console Set Addr No Signal Status Pan Reverse Tilt Reverse Pan Scan Degree Scan Feedback Standby Time	Enable/Disable Off/Hold/Auto/Music Enable/Disable Enable/Disable 360/540 Enable/Disable Disable/1~120Min,30Min	Address can be changed by console The status while no signal Pan Reverse Tilt Reverse Pan Scan Degree Scan Feedback Standby time
	Fan Speed	Smart Control High Speed Low Speed		Auto fans speed Fans high speed Fans low speed
	Display Setting	Backlight Time Keyboard Lock Lightness Set Language Select Auto Screen Set	1~80 Min/Disable Enable/Disable 15~100% 80% Chinese/English off/on/auto	Backlight off time Press <menu> 3s to unlock Back lightness of screen Change the language Screen change Setting
	Temperature Unit	Celsius Fahrenheit		Temperature unit
	Value Default	Pan……	Pan =XXX	The default value
	Wireless Dev	Wireless Off		Wireless off

		Wireless On Wireless Trans. Wireless Reset		Wireless on Wireless transfer DMX data to another Wireless reset
	Restore Default	Yes/No		Restore to default value
	Product Select	- Password-	GTD xxx xxx xxx	Product Name Select
Motor Reset	System Reset Scan Reset Others Reset			System reset Pan and tilt motor reset All other motor reset
Channel Adjust	Test Mode	Pan……		Every channel test
	Manual Mode	Pan :	Pan =XXX :	Manual control
	Adjust Mode	Input Password Pan :	Password=XXX(XX) Pan=XXX :	The password of adjust mode Fixed all begin position
Channel Setting	Channel Mode	Standard Mode Basic Mode Extended Mode Custom Mode 1 Custom Mode 2 Custom Mode 3		Standard channel mode Basic channel mode Extended channel mode Custom channel mode 1 Custom channel mode 2 Custom channel mode 3
	Set Custom Mode1 Set Custom Mode2 Set Custom Mode3	Max Channel Pan :	Channel = XX Pan = CH01 :	Change the channel order
Program Edit	Select Group	Program Unit 1 Program Unit 2 Program Unit 3	Program 1 ~10 Program 1 ~ 10 Program 1 ~ 10	Choose build-in program for slave 1 Choose build-in program for slave 2 Choose build-in program for slave 3
	Program Edit	Auto-Program1 : Auto-Program10	Run Step 1=Scene xxx Step 8=Scene xxx	Choose the scene for program 1 : Choose the scene for program 10
	Scene Edit	Scene Edit:001-250	Pan,……Pan=xxx Scene Time=xxx Input By Console	Edit the channel DMX Edit the scene time Get scene DMX form console
	Record Scene	Scene XX->XX		Record scene form console

***Settings highlighted in light grey are default values**

9. DMX Protocol

Standard

DMX mode Standard (95ch)	Name	DMX value		DMX percentage		Function	Default DMX Value
1	Pan	0	65535	0.0%	100.0%	Pan, fine (LSB)	0(0%)
2							
3	Tilt	0	65535	0.0%	100.0%	Tilt, fine (LSB)	46 (18.0%)
4							
5	Scan speed	0	255	0.0%	100.0%	Scan speed from fast to slow	0(0%)
6	Strobe/ Shutter	0	31	0.0%	12.2%	Closed	0(0%)
		32	63	12.5%	24.7%	Open	
		64	127	25.1%	49.8%	Synchronous strobe from slow to fast	
		128	159	50.2%	62.4%	Open	
		160	223	62.7%	87.5%	Random strobe from slow to fast	
		224	255	87.8%	100.0%	Open	
7	Intensity	0	255	0.0%	100.0%	No light ➔ Full light	0(0%)
		0	65535	0.0%	100.0%	Intensity fade, fine (LSB)	
8	Red 1	0	255	0.0%	100.0%	No light ➔ Full light	0(0%)
9	Green 1	0	255	0.0%	100.0%	No light ➔ Full light	0(0%)
10	Blue 1	0	255	0.0%	100.0%	No light ➔ Full light	0(0%)
11	White 1	0	255	0.0%	100.0%	No light ➔ Full light	0(0%)
.....							
80	Red 19	0	255	0.0%	100.0%	No light ➔ Full light	0(0%)
81	Green 19	0	255	0.0%	100.0%	No light ➔ Full light	0(0%)
82	Blue 19	0	255	0.0%	100.0%	No light ➔ Full light	0(0%)
83	White 19	0	255	0.0%	100.0%	No light ➔ Full light	0(0%)
84	Rainbow Function	0	9	0.0%	3.5%	No function	0(0%)
		10	39	3.9%	15.3%	Rainbow scene 1	
		40	71	15.7%	27.8%	Rainbow scene 2	
		72	103	28.2%	40.4%	Rainbow scene 3	
		104	135	40.8%	52.9%	Rainbow scene 4	
		136	167	53.3%	65.5%	Rainbow scene 5	

		168	199	65.9%	78.0%	Rainbow scene 6	
		200	231	78.4%	90.6%	Rainbow scene 7	
		232	255	91.0%	100.0%	Rainbow flow from slow to fast	
85	Color temperature	0	21	0.0%	8.2%	No function	0(0%)
		22	255	8.6%	100.0%	3200K-7200K	
86	Zoom	0	65535	0.0%	100.0%	Zoom, fine (LSB)	0(0%)
87							
88	Static Pattern	0	15	0.0%	5.9%	No function	0(0%)
		16	25	6.3%	9.8%	Static Pattern1	
		26	35	10.2%	13.7%	Static Pattern2	
		36	45	14.1%	17.6%	Static Pattern3	
		46	55	18.0%	21.6%	Static Pattern4	
		56	65	22.0%	25.5%	Static Pattern5	
		66	75	25.9%	29.4%	Static Pattern6	
		76	85	29.8%	33.3%	Static Pattern7	
		86	95	33.7%	37.3%	Static Pattern8	
		96	105	37.6%	41.2%	Static Pattern9	
		106	115	41.6%	45.1%	Static Pattern10	
		116	125	45.5%	49.0%	Static Pattern11	
		126	135	49.4%	52.9%	Static Pattern12	
		136	145	53.3%	56.9%	Static Pattern13	
		146	155	57.3%	60.8%	Static Pattern14	
		156	165	61.2%	64.7%	Static Pattern15	
		166	175	65.1%	68.6%	Static Pattern16	
		176	185	69.0%	72.5%	Static Pattern17	
		186	195	72.9%	76.5%	Static Pattern18	
		196	205	76.9%	80.4%	Static Pattern19	
		206	215	80.8%	84.3%	Static Pattern20	
		216	225	84.7%	88.2%	Static Pattern21	
		226	235	88.6%	92.2%	Static Pattern22	
		236	245	92.5%	96.1%	Static Pattern23	
		246	255	96.5%	100.0%	Static Pattern24	
89	Dynamic Pattern	0	15	0.0%	5.9%	No Function	0(0%)
		16	30	6.3%	11.8%	Dynamic Pattern1	
		31	45	12.2%	17.6%	Dynamic Pattern2	

		46	60	18.0%	23.5%	Dynamic Pattern3	
		61	75	23.9%	29.4%	Dynamic Pattern4	
		76	90	29.8%	35.3%	Dynamic Pattern5	
		91	105	35.7%	41.2%	Dynamic Pattern6	
		106	120	41.6%	47.1%	Dynamic Pattern7	
		121	135	47.5%	52.9%	Dynamic Pattern8	
		136	150	53.3%	58.8%	Dynamic Pattern9	
		151	165	59.2%	64.7%	Dynamic Pattern10	
		166	180	65.1%	70.6%	Dynamic Pattern11	
		181	195	71.0%	76.5%	Dynamic Pattern12	
		196	210	76.9%	82.4%	Dynamic Pattern13	
		211	225	82.7%	88.2%	Dynamic Pattern14	
		226	240	88.6%	94.1%	Dynamic Pattern15	
		241	255	94.5%	100.0%	Dynamic Pattern16	
90	Dynamic Pattern Speed	0	255	0.0%	100.0%	Slow ✦ Fast	
91	Dynamic BackGround Red	0	255	0.0%	100.0%	No light ➔ Full light	0(0%)
92	Dynamic BackGround Green	0	255	0.0%	100.0%	No light ➔ Full light	0(0%)
93	Dynamic BackGround Blue	0	255	0.0%	100.0%	No light ➔ Full light	0(0%)
94	Dynamic BackGround White	0	255	0.0%	100.0%	No light ➔ Full light	0(0%)
95	Special controls	0	59	0.0%	23.1%	No function	0(0%)
		60	69	23.5%	27.1%	Reset all motor after 5 seconds	
		70	79	27.5%	31.0%	Scan motor reset after 5 seconds	
		80	89	31.4%	34.9%	Other reset after 5 seconds	
		90	99	35.3%	38.8%	No function	
		100	109	39.2%	42.7%	Built-in program 1	
		110	119	43.1%	46.7%	Built-in program 2	
		120	129	47.1%	50.6%	Built-in program 3	

		130	139	51.0%	54.5%	Built-in program 4	
		140	149	54.9%	58.4%	Built-in program 5	
		150	159	58.8%	62.4%	Built-in program 6	
		160	169	62.7%	66.3%	Built-in program 7	
		170	179	66.7%	70.2%	Built-in program 8	
		180	189	70.6%	74.1%	Built-in program 9	
		190	199	74.5%	78.0%	Built-in program 10	
		200	209	78.4%	82.0%	Fan Smart Mode	
		210	219	82.4%	85.9%	Fan High Speed Mode	
		220	229	86.3%	89.8%	Fan Low Speed Mode	
		230	255	90.2%	100.0%	No function	

Basic

DMX mode Basic (20ch)	Name	DMX value		DMX percentage		Function	Default DMX Value
1	Pan	0	255	0.0%	100.0%	Pan	0(0%)
2	Tilt	0	255	0.0%	100.0%	Tilt	46 (18.0%)
3	Scan speed	0	255	0.0%	100.0%	Scan speed from fast to slow	0(0%)
4	Strobe/ Shutter	0	31	0.0%	12.2%	Closed	0(0%)
		32	63	12.5%	24.7%	Open	
		64	127	25.1%	49.8%	Synchronous strobe from slow to fast	
		128	159	50.2%	62.4%	Open	
		160	223	62.7%	87.5%	Random strobe from slow to fast	
		224	255	87.8%	100.0%	Open	
5	Intensity	0	255	0.0%	100.0%	No light ➔ Full light	0(0%)
6	Total Red	0	255	0.0%	100.0%	No light ➔ Full light	0(0%)
7	Total Green	0	255	0.0%	100.0%	No light ➔ Full light	0(0%)
8	Total Blue	0	255	0.0%	100.0%	No light ➔ Full light	0(0%)
9	Total White	0	255	0.0%	100.0%	No light ➔ Full light	0(0%)
10	Rainbow Function	0	9	0.0%	3.5%	No function	0(0%)
		10	39	3.9%	15.3%	Rainbow scene 1	
		40	71	15.7%	27.8%	Rainbow scene 2	
		72	103	28.2%	40.4%	Rainbow scene 3	
		104	135	40.8%	52.9%	Rainbow scene 4	
		136	167	53.3%	65.5%	Rainbow scene 5	
		168	199	65.9%	78.0%	Rainbow scene 6	
		200	231	78.4%	90.6%	Rainbow scene 7	

		232	255	91.0%	100.0%	Rainbow flow from slow to fast	
11	Color temperature	0	21	0.0%	8.2%	No function	0(0%)
		22	255	8.6%	100.0%	3200K-7200K	
12	Zoom	0	255	0.0%	100.0%	Near ➔ Far	0(0%)
13	Static Pattern	0	15	0.0%	5.9%	No function	0(0%)
		16	25	6.3%	9.8%	Static Pattern1	
		26	35	10.2%	13.7%	Static Pattern2	
		36	45	14.1%	17.6%	Static Pattern3	
		46	55	18.0%	21.6%	Static Pattern4	
		56	65	22.0%	25.5%	Static Pattern5	
		66	75	25.9%	29.4%	Static Pattern6	
		76	85	29.8%	33.3%	Static Pattern7	
		86	95	33.7%	37.3%	Static Pattern8	
		96	105	37.6%	41.2%	Static Pattern9	
		106	115	41.6%	45.1%	Static Pattern10	
		116	125	45.5%	49.0%	Static Pattern11	
		126	135	49.4%	52.9%	Static Pattern12	
		136	145	53.3%	56.9%	Static Pattern13	
		146	155	57.3%	60.8%	Static Pattern14	
		156	165	61.2%	64.7%	Static Pattern15	
		166	175	65.1%	68.6%	Static Pattern16	
		176	185	69.0%	72.5%	Static Pattern17	
		186	195	72.9%	76.5%	Static Pattern18	
		196	205	76.9%	80.4%	Static Pattern19	
		206	215	80.8%	84.3%	Static Pattern20	
		216	225	84.7%	88.2%	Static Pattern21	
		226	235	88.6%	92.2%	Static Pattern22	
		236	245	92.5%	96.1%	Static Pattern23	
		246	255	96.5%	100.0%	Static Pattern24	
14	Dynamic Pattern	0	15	0.0%	5.9%	No function	0(0%)
		16	30	6.3%	11.8%	Dynamic Pattern1	
		31	45	12.2%	17.6%	Dynamic Pattern2	
		46	60	18.0%	23.5%	Dynamic Pattern3	
		61	75	23.9%	29.4%	Dynamic Pattern4	
		76	90	29.8%	35.3%	Dynamic Pattern5	
		91	105	35.7%	41.2%	Dynamic Pattern6	
		106	120	41.6%	47.1%	Dynamic Pattern7	
		121	135	47.5%	52.9%	Dynamic Pattern8	
		136	150	53.3%	58.8%	Dynamic Pattern9	
		151	165	59.2%	64.7%	Dynamic Pattern10	
		166	180	65.1%	70.6%	Dynamic Pattern11	
		181	195	71.0%	76.5%	Dynamic Pattern12	

		196	210	76.9%	82.4%	Dynamic Pattern13	
		211	225	82.7%	88.2%	Dynamic Pattern14	
		226	240	88.6%	94.1%	Dynamic Pattern15	
		241	255	94.5%	100.0%	Dynamic Pattern16	
15	Dynamic Pattern Speed	0	255	0.0%	100.0%	Slow ✦ Fast	
16	Dynamic BackGround Red	0	255	0.0%	100.0%	No light ➔ Full light	0(0%)
17	Dynamic BackGround Green	0	255	0.0%	100.0%	No light ➔ Full light	0(0%)
18	Dynamic BackGround Blue	0	255	0.0%	100.0%	No light ➔ Full light	0(0%)
19	Dynamic BackGround White	0	255	0.0%	100.0%	No light ➔ Full light	0(0%)
20	Special controls	0	59	0.0%	23.1%	No function	0(0%)
		60	69	23.5%	27.1%	Reset all motor after 5 seconds	
		70	79	27.5%	31.0%	Scan motor reset after 5 seconds	
		80	89	31.4%	34.9%	Other reset after 5 seconds	
		90	99	35.3%	38.8%	No function	
		100	109	39.2%	42.7%	Built-in program 1	
		110	119	43.1%	46.7%	Built-in program 2	
		120	129	47.1%	50.6%	Built-in program 3	
		130	139	51.0%	54.5%	Built-in program 4	
		140	149	54.9%	58.4%	Built-in program 5	
		150	159	58.8%	62.4%	Built-in program 6	
		160	169	62.7%	66.3%	Built-in program 7	
		170	179	66.7%	70.2%	Built-in program 8	
		180	189	70.6%	74.1%	Built-in program 9	
		190	199	74.5%	78.0%	Built-in program 10	
		200	209	78.4%	82.0%	Fan Smart Mode	
		210	219	82.4%	85.9%	Fan High Speed Mode	
		220	229	86.3%	89.8%	Fan Low Speed Mode	
		230	255	92.2%	100.0%	No function	

Extended

DMX mode Extended (172ch)	Name	DMX value		DMX percentage		Function	Default DMX Value
1	Pan	0	65535	0.0%	100.0%	Pan, fine (LSB)	0(0%)
2							
3	Tilt	0	65535	0.0%	100.0%	Tilt, fine (LSB)	46 (18.0%)
4							
5	Scan speed	0	255	0.0%	100.0%	Scan speed from fast to slow	0(0%)
6	Strobe/ Shutter	0	31	0.0%	12.2%	Closed	0(0%)
		32	63	12.5%	24.7%	Open	
		64	127	25.1%	49.8%	Synchronous strobe from slow to fast	
		128	159	50.2%	62.4%	Open	
		160	223	62.7%	87.5%	Random strobe from slow to fast	
		224	255	87.8%	100.0%	Open	
7	Intensity	0	65535	0.0%	100.0%	Intensity fade, fine (LSB)	0(0%)
8							
9	Red 1	0	65535	0.0%	100.0%	Intensity fade, fine (LSB)	0(0%)
10							
11	Green 1	0	65535	0.0%	100.0%	Intensity fade, fine (LSB)	0(0%)
12							
13	Blue 1	0	65535	0.0%	100.0%	Intensity fade, fine (LSB)	0(0%)
14							
15	White 1	0	65535	0.0%	100.0%	Intensity fade, fine (LSB)	0(0%)
16							
.....							
153	Red 19	0	65535	0.0%	100.0%	Intensity fade, fine (LSB)	0(0%)
154							
155	Green 19	0	65535	0.0%	100.0%	Intensity fade, fine (LSB)	0(0%)
156							
157	Blue 19	0	65535	0.0%	100.0%	Intensity fade, fine (LSB)	0(0%)
158							
159	White 19	0	65535	0.0%	100.0%	Intensity fade, fine (LSB)	0(0%)
160							
161	Rainbow Function	0	9	0.0%	3.5%	No function	0(0%)
		10	39	3.9%	15.3%	Rainbow scene 1	
		40	71	15.7%	27.8%	Rainbow scene 2	
		72	103	28.2%	40.4%	Rainbow scene 3	
		104	135	40.8%	52.9%	Rainbow scene 4	
		136	167	53.3%	65.5%	Rainbow scene 5	
		168	199	65.9%	78.0%	Rainbow scene 6	
		200	231	78.4%	90.6%	Rainbow scene 7	
		232	255	91.0%	100.0%	Rainbow flow from slow to fast	

162	Color temperature	0	21	0.0%	8.2%	No function	0(0%)
		22	255	8.6%	100.0%	3200K-7200K	
163	Zoom	0	65535	0.0%	100.0%	Zoom, fine (LSB)	0(0%)
164							
165	Static Pattern	0	15	0.0%	5.9%	No function	0(0%)
		16	25	6.3%	9.8%	Static Pattern1	
		26	35	10.2%	13.7%	Static Pattern2	
		36	45	14.1%	17.6%	Static Pattern3	
		46	55	18.0%	21.6%	Static Pattern4	
		56	65	22.0%	25.5%	Static Pattern5	
		66	75	25.9%	29.4%	Static Pattern6	
		76	85	29.8%	33.3%	Static Pattern7	
		86	95	33.7%	37.3%	Static Pattern8	
		96	105	37.6%	41.2%	Static Pattern9	
		106	115	41.6%	45.1%	Static Pattern10	
		116	125	45.5%	49.0%	Static Pattern11	
		126	135	49.4%	52.9%	Static Pattern12	
		136	145	53.3%	56.9%	Static Pattern13	
		146	155	57.3%	60.8%	Static Pattern14	
		156	165	61.2%	64.7%	Static Pattern15	
		166	175	65.1%	68.6%	Static Pattern16	
		176	185	69.0%	72.5%	Static Pattern17	
		186	195	72.9%	76.5%	Static Pattern18	
		196	205	76.9%	80.4%	Static Pattern19	
		206	215	80.8%	84.3%	Static Pattern20	
		216	225	84.7%	88.2%	Static Pattern21	
		226	235	88.6%	92.2%	Static Pattern22	
		236	245	92.5%	96.1%	Static Pattern23	
		246	255	96.5%	100.0%	Static Pattern24	
166	Dynamic Pattern	0	15	0.0%	5.9%	No Function	0(0%)
		16	30	6.3%	11.8%	Dynamic Pattern1	
		31	45	12.2%	17.6%	Dynamic Pattern2	
		46	60	18.0%	23.5%	Dynamic Pattern3	
		61	75	23.9%	29.4%	Dynamic Pattern4	
		76	90	29.8%	35.3%	Dynamic Pattern5	
		91	105	35.7%	41.2%	Dynamic Pattern6	
		106	120	41.6%	47.1%	Dynamic Pattern7	
		121	135	47.5%	52.9%	Dynamic Pattern8	
		136	150	53.3%	58.8%	Dynamic Pattern9	
		151	165	59.2%	64.7%	Dynamic Pattern10	
		166	180	65.1%	70.6%	Dynamic Pattern11	
		181	195	71.0%	76.5%	Dynamic Pattern12	
		196	210	76.9%	82.4%	Dynamic Pattern13	
		211	225	82.7%	88.2%	Dynamic Pattern14	
		226	240	88.6%	94.1%	Dynamic Pattern15	
		241	255	94.5%	100.0%	Dynamic Pattern16	
167	Dynamic Pattern Speed	0	255	0.0%	100.0%	Slow ✦ Fast	
168	Dynamic BackGround Red	0	255	0.0%	100.0%	No light ➔ Full light	0(0%)

169	Dynamic BackGround Green	0	255	0.0%	100.0%	No light ➔ Full light	0(0%)
170	Dynamic BackGround Blue	0	255	0.0%	100.0%	No light ➔ Full light	0(0%)
171	Dynamic BackGround White	0	255	0.0%	100.0%	No light ➔ Full light	0(0%)
172	Special controls	0	59	0.0%	23.1%	No function	0(0%)
		60	69	23.5%	27.1%	Reset all motor after 5 seconds	
		70	79	27.5%	31.0%	Scan motor reset after 5 seconds	
		80	89	31.4%	34.9%	Other reset after 5 seconds	
		90	99	35.3%	38.8%	No function	
		100	109	39.2%	42.7%	Built-in program 1	
		110	119	43.1%	46.7%	Built-in program 2	
		120	129	47.1%	50.6%	Built-in program 3	
		130	139	51.0%	54.5%	Built-in program 4	
		140	149	54.9%	58.4%	Built-in program 5	
		150	159	58.8%	62.4%	Built-in program 6	
		160	169	62.7%	66.3%	Built-in program 7	
		170	179	66.7%	70.2%	Built-in program 8	
		180	189	70.6%	74.1%	Built-in program 9	
		190	199	74.5%	78.0%	Built-in program 10	
		200	209	78.4%	82.0%	Fan Smart Mode	
		210	219	82.4%	85.9%	Fan High Speed Mode	
		220	229	86.3%	89.8%	Fan Low Speed Mode	
		230	255	92.2%	100.0%	No function	

10. System wiring diagram

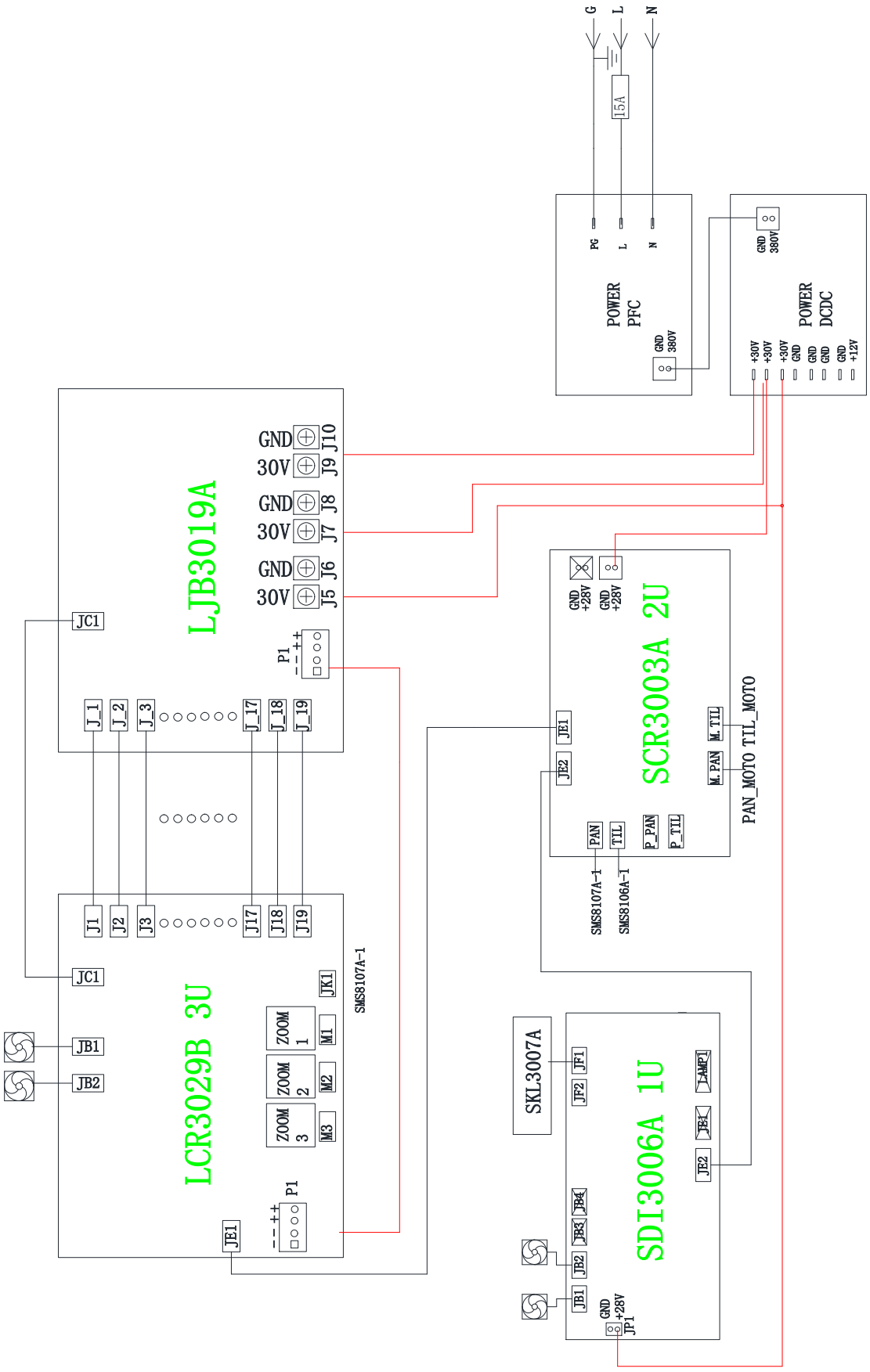

11. Maintenance and Troubleshooting

11.1 Cleaning and maintenance

It is required that the fixture should be kept clean and well maintained to ensure its reliability. Its lifespan mainly depends on the working environment and proper operation. Should you have any questions, please consult a technical engineer of GTD Lighting.

Notes: Damage resulted from dust, smoke, oil or improper use is not covered by warranty.

Notes: Disconnect the fixture from AC power, and let it cool down for at least 15 minutes before opening the housing. Make sure to use a soft cloth to clean the optical components, and be careful, as the coating is easily scratched. Do not use any organic solvent such as alcohol to clean the reflector mirror, dichroic color filters or housing of the fixture.

- If the lens is cracked or otherwise damaged, replace it immediately.
- If the lamp becomes damaged or deformed in any way it must be replaced.
- If the light from the lamp appears dim, this normally indicates that it is reaching the end of its life span and should be changed at once. Aged lamps run to the extremity of their life might explode.。
- If fixture does not function, check the fuse on the power socket of the fixture. Replace the fuse of the same specification if it is blown.
- The fixture is equipped with thermal-protection device that will switch off the lamp in case of overheating. If this happens, please check that the fans are not blocked, and clean them if they are dirty. Check whether the fans are operational. If not, call a qualified technician.

11.2 Troubleshooting

Problem	Possible Cause	Suggested Correction
No response after connected to A/C power	Power switch not turned on.	Turn on power switch.
	Take out the fuse and check if it is blown.	Locate the blown fuse. Remove the broken fuse. Insert areplacement fuse of the correct amperage
	Abnormal A/C input (A/C power socket, power cables, luminaire power socket).	Replace AC power socket and power cables, and then adjust power socket for proper connection.
	No DC voltage from switching power supply.	Check if the switching power supply has DC voltage output. Replace the switching power supply.
No response or wrong response to the commands of the control system	DMX cables disconnected from fixture's DATA IN connector.	Connect DMX cable to the fixture's DATA IN connector.
	Open circuit or short circuit fault in the DMX cables.	Replace DMX cables as required.
	Wrong DMX address for the fixture in the control system.	Ensure the address in "Run setting > Address Setting >Address" of the fixture is consistent with the address in the control system.
	Misuse in "Channel setting > Channel Mode of the fixture.	Choose the channel mode in "Channel setting > Channel Mode" of the fixture as required by the

Problem	Possible Cause	Suggested Correction
		user
	Malfunctioning of DMX cannon input/output connectors. No input/output voltage to the main control board of the fixture.	Troubleshooting the DMX XLR signal plate of the fixture, replace the main control board of the fixture.
The lamp does not start when switch is turned on	Normal end of lamp life.	Test the lamp in an adjacent fixture which is known to be operating properly and then replace as necessary
	Whether the function of the relay board is intact, whether the signal is normal or not.	Repair or replace.
	Shorted leads between ballast and the lamp	Replace components as required.
	Incorrect ballast output.	Check ballast output to determine if it conforms to lamp requirements. If voltage and current do not stabilize in five to ten minutes warm-up time, ballast output is incorrect and adjustment should be made. Check capacitor wiring, if visibly available, to determine if capacitors are properly wired.
	Incorrect triggers output.	Replace triggers.
The lamp is off unexpected	The fixture is in sleep mode	Should the fixture is not in active use for "standby time", the sleep mode is enabled automatically to make it more stable and safer, sleep time can be customized.
	Lamp has been operating: cool down time insufficient.	Environmental conditions such as extreme temperatures will have the fixture stop working, the lamps will require a period of time to cool and re-establish optimum starting conditions. Restart time varies with the degree of ventilation built into it, ambient temperature, and draft conditions.
	Overheat ballast resulting in premature failure or damaged ballast.	The ballast incorporate internal automatic-resetting thermal protection, which deactivates the ballast should it overheat. Normal operation resumes once the ballast has cooled sufficiently. Burned-out or failing lamps, or high temperatures in or around the fixture, can cause the ballast to overheat, so we need solve the problem and replace components as required
	Thermostat damaged.	Replace.
Shaking, wrong	No function the connector between gobo	Reconnect the gobo wheel motor to the drive,

Problem	Possible Cause	Suggested Correction
position, and out of control gobo wheel	wheel motor and drive, loose, damaged, or broken cables connecting the gobo wheel and drive.	and replace cables as required.
	The gobo wheel motor's drive IC on the PCB might be out of condition.	Replace the drive having the same software version as required.
	Dislocated magnetic tube and positioning magnet, or damaged magnetic tube.	Calibrate the position of the magnetic tube to the positioning magnet, and replace magnetic tube as required
	Shaking motor, wrong rotation angle, losing step or damaged motor	Replace the motor as required.
Decreased brightness, uneven pattern projections	Normal end of lamp life.	Test the lamp in an adjacent fixture which is known to be operating properly and then replace as necessary
	The midline of the lamp is not aligned with the center point of the effect assembly (consisting of the rotating gobo wheel, static gobo wheel, color wheel, strobe, prism, and frost), focus module, and object lens.	Reinstall the lamp. Adjust the lamp position until the midline of the lamp is aligned with the center point of the effect assemblies (consisting of the rotating gobo wheel, static gobo wheel, color wheel, strobe, prism, frost, the focus adjusting module, and the object lens).
	Excessive dusts or smudges on the effect assembly, focus module and objective lens.	Follow the instructions stated in this user manual to clean the effect assembly, focus module and objective lens.
	Damaged or deformed effect assembly, focus module or objective lens.	Replace the damaged or deformed components
Wrong color	Normal end of lamp life	Test the lamp in an adjacent fixture which is known to be operating properly and then replace as necessary
	Excessive dusts or smudges on the rotating gobo wheel or color wheel.	Follow the instructions stated in this user manual to clean the rotating gobo wheel or color wheel.
	Rotating gobo wheel, color wheel with coating wearing off, damages or deformation	Replace the worn-off, damaged or deformed rotating gobo wheel and color wheel
Non-clear shape	Excessive dusts or smudges on the rotating gobo wheel or color wheel	Follow the instructions stated in this user manual to clean the rotating gobo wheel or color wheel.
	Excessive dusts or smudges on the focus module or objective lens	Follow the instructions stated in this user manual to clean the focus module or objective lens
	Damaged or deformed focus module or objective lens.	Replace the damaged or deformed focus module or objective lens.

Guangzhou Hongyang Gtd Stage Equipment Co.,Ltd.

Tel : +86-20-82898660

Web : www.hy-gtd.com | **Email :** contact@hy-gtd.com

Add : No.38 Xiangshan Avenue, Ningxi Sub-district, Zengcheng, Guangzhou, Guangdong Province, China